TVD-CB3B-W

TruVision Cup Base for M Series fixed lens white dome cameras, white

Overview

With the TVD-CB3B-W cup base, M series fixed lens white dome cameras can be installed on wall/pendant mount brackets TVD-SNB-W, TVD-CBW-W and TVD-PPB-W.



Details

- Compatible with M Series fixed lens white dome IP cameras
- Compatible with wall/pendant mount brackets TVD-SNB-W, TVD-CBW-W and TVD-PPB-W
- Designed for convenient wiring

TVD-CB3B-W

TruVision Cup Base for M Series fixed lens white dome cameras, white

Technical specifications

General

Bracket type	Camera
Support type	TruVision mini domes
Bracket mounting part	Cup base
Mount type	Pendant mount

Physical

Physical dimensions	Ø 140 x 66.6 mm
Net weight	220 g
Colour	White
Material	Aluminium

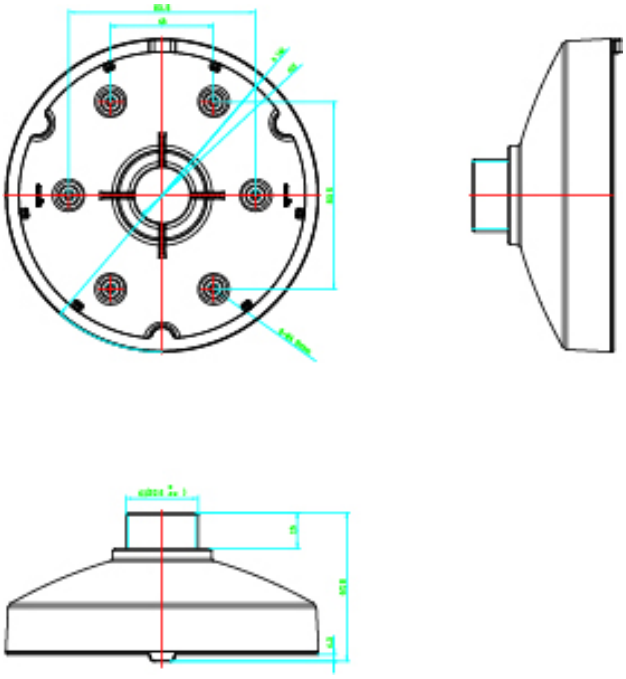

As a company of innovation, Kidde Global Solutions reserves the right to change product specifications without notice. For the latest product specifications, visit firesecurityproducts.com online or contact your sales representative.

Last updated on 13 August 2026 - 19:41