TVGP-M01-0802-BUL-G

TruVision 8MP/4K, H.265+, Smart IP Bullet Camera, 60 m IR, 2.8 to 12 mm lens, grey

Product overview

The TruVision M-series IP bullet cameras leverages the latest H.265+ video compression technology to bring state of-the-art, high-definition pictures to the mass video surveillance market. With video resolutions from 2 Megapixel to 4K, these IP cameras represent a flexible video surveillance device to meet any need. Equipped with advanced technology and signal processing capability, they effectively capture video under challenging conditions.

The cameras go above and beyond standard motion detection with enhanced alarm capabilities, including cross line detection, intrusion detection and face detection features. With its smart person/vehicle feature the camera can ignore irrelevant motion or VCA events which will automatically lead to less storage consumption and faster retrieval of relevant video events.

TruVision cameras utilize H.265+ and/or H.264 compression technology with triple-streaming capability, making it easy to manage the camera's bandwidth usage. Recording to a local MicroSD card (not included) protects data in the event of network disruptions.



Details

- Maximum resolution: 8MP/4K (3840 × 2160)
- Motorized zoom lens 2.8 to 12 mm
- Person/vehicle classification
- Video intelligence: intrusion detection, cross line detection, face detection
- Up to 60 m IR illumination
- H.265+ compression
- ONVIF Profile G, S, T open standards
- Edge recording up to 256 GB SDHC card

TVGP-M01-0802-BUL-G

TruVision 8MP/4K, H.265+, Smart IP Bullet Camera, 60 m IR, 2.8 to 12 mm lens, grey

Technical specifications

General

Technology	IP
Video standard	NTSC, PAL
Image settings	Widok korytarzowy, Lustro, Pole uwagi (ROI)
Privacy masking	Yes
Software compatibility	Milestone XProtect, OnGuard, TruVision Navigator, TVRmobile, Web Browser

Camera

Sensor size	1/2.8"
Max. resolution	8 MP (4K)
Sensor scan	Progressive
Sensor type	CMOS
Shutter time	1/3 to 1/100,000 s

Lighting performance

WDR type	True WDR
WDR	120 dB
Digital noise reduction	3D DNR
Day/night	Dzień/Noc z filtrem
Motorized IR cut filter	Yes
Color sensitivity	Color: 0.005 Lux @ (F1.6, AGC ON), 0 Lux with IR on
Infrared (IR)	Yes
IR range	Up to 60 m
IR wavelength	850 nm

Encoding

Video streams	3
Main stream compression	H.264, H.265, H.265+
Sub stream compression	H.264, H.265, MJPEG
Third stream compression	H.264, H.265
Video bit rate	32 to 16 Mbps
Main stream resolutions	1280 x 720 (XVGA), 1920 x 1080 (1080p), 2688 x 1520, 3200 x 1800, 3840 x 2160
Sub stream resolutions	640 x 360 (nHD), 640 x 480 (VGA)
Third stream resolutions	1280 x 720 (XVGA), 1920 x 1080 (1080p), 640 x 360 (nHD), 640 x 480 (VGA)
Max. resolution @ fps	3840 x 2160 @ 20 fps

Lens

Lens type	Zmienna zmotoryzowana
Focal length	2.8 to 12 mm, Horizontal FoV 108° to 30°, vertical FoV 56° to 17°, diagonal FoV 131° to 35°
f-stop	F1.6
Auto iris	No
Auto focus	Yes
Motorized zoom	Yes

Network

Network interface	RJ-45 10/100 Mbps self-adaptive Ethernet interface
Integration	ONVIF Profile G, ONVIF Profile S, ONVIF Profile T
Supported network protocols	802.1x, Bonjour, DDNS, DHCP, DNS, FTP, HTTP, HTTPS, ICMP, IGMP, IPv4, IPv6, NTP, PPPoE, QoS, RTCP, RTP, RTSP, SMTP, SNMP, TCP/IP, UPnP

Audio

Audio compression	G.711alaw, G.711ulaw, G.722.1, G.726, MP2L2, MP3
Audio in	1 input (line in), two-core terminal block, max. input amplitude: 3.3 vpp, input impedance: 4.7 KΩ
Audio out	1 output (line out), two-core terminal block, max. output amplitude: 3.3 vpp, output impedance: 100 Ω

Alarm I/O

Alarm inputs	1
Alarm outputs	1 output (max. 12 VDC, 30 mA)
Alarm I/O connection	Terminal block

Storage

Local storage type	Built-in Micro SD/SDHC/SDXC card slot
Max. SD card capacity	256 GB

Video intelligence

Alarm trigger	HDD error, HDD full, Invalid login, IP address conflict, Motion detection, Network disconnected, Video tampering
ROI	Support 1 fixed region for main stream and sub-stream
Smart event	Zaawansowana detekcja ruchu, Wykrycie twarzy, Wykrywanie włamania i napadu, Line crossing detection, Motion detection
Intelligence options	Person/vehicle detection on motion, line crossing and intrusion detection

Electrical

Operating voltage	12 VDC,1.08 A, PoE: (802.3at, 42.5 to 57 V), 0.36 to 0.27 A
Power consumption	max. 15 W

Physical

Physical dimensions	308.5 × 97.9 × 93 mm 12.2 × 3.9 × 3.7 in.
Net weight	1390 g 3.1 lb.
Shipping weight	1961 g 4.3 lb.
Colour	Grå
Form Factor	Bullet

TVGP-M01-0802-BUL-G

TruVision 8MP/4K, H.265+, Smart IP Bullet Camera, 60 m IR, 2.8 to 12 mm lens, grey

Environmental

Vandal proof	Yes
Impact rating	IK10
Environment	Udendørs
Operating temperature	-30 to +60°C -22 to +140°F
Relative humidity	<95% noncondensing
IP rating	IP67

Regulatory

Compliancy	CE, FCC, REACH, RoHS, UL, WEEE

Compatible Accessories

Back Box	Included with camera

Compatible products

Category	Reference	Description
Brackets & Mounts	TVD-M-CMA	TruVision Corner Mount Adaptor for TVD-SNB (or TVC-IP Bullet Cameras)
Brackets & Mounts	TVD-M-PMA-SS	TruVision Pole Mount Adaptor, stainless steel

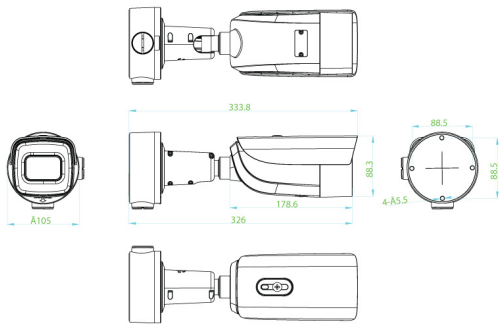

As a company of innovation, Kidde Global Solutions reserves the right to change product specifications without notice. For the latest product specifications, visit firesecurityproducts.com online or contact your sales representative.

Last updated on 13 August 2026 - 20:20