TVGP-M01-0402-BUL-B

TruVision 4MP, H.265+, Câmara IP Bullet inteligente, 60 m IR, lente de 2,8 a 12 mm, preto

Overview

The TruVision M-series IP bullet cameras leverages the latest H.265+ video compression technology to bring state of-the-art, high-definition pictures to the mass video surveillance market. With video resolutions from 2 Megapixel to 4K, these IP cameras represent a flexible video surveillance device to meet any need. Equipped with advanced technology and signal processing capability, they effectively capture video under challenging conditions.

The cameras go above and beyond standard motion detection with enhanced alarm capabilities, including cross line detection, intrusion detection and face detection features. With its smart person/vehicle feature the camera can ignore irrelevant motion or VCA events which will automatically lead to less storage consumption and faster retrieval of relevant video events.

TruVision cameras utilize H.265+ and/or H.264 compression technology with triple-streaming capability, making it easy to manage the camera's bandwidth usage. Recording to a local MicroSD card (not included) protects data in the event of network disruptions.



Detalhes

- Resolução máxima: 4MP (2688 x 1520)
- Lente de zoom motorizada de 2,8 a 12 mm
- Classificação pessoa/veículo
- Inteligência de vídeo: deteção de intrusão, deteção de linhas cruzadas, deteção de rostos
- Iluminação IR até 60 m
- Compressão H.265+
- Normas abertas ONVIF Profile G, S, T
- gravação em cartão SDHC até 256 GB

TVGP-M01-0402-BUL-B

TruVision 4MP, H.265+, Câmara IP Bullet inteligente, 60 m IR, lente de 2,8 a 12 mm, preto

Especificações técnicas

General

Technology	IP
Video standard	NTSC, PAL
Image settings	Flur-Ansicht, Spiegel, ROI (Region Of Interest)
Privacy masking	Sim
Software compatibility	Milestone XProtect, OnGuard, TruVision Navigator, TVRmobile, Webbrowser

Camera

Sensor size	1/3"
Max. resolution	4 MPX
Sensor scan	Progressiv
Sensor type	CMOS
Shutter time	1/3 a 1/100,000 s

Lighting performance

WDR type	Echt-WDR
WDR	120 dB
Digital noise reduction	3D DNR
Day/night	Echt Tag / Nacht
Motorized IR cut filter	Yes
Color sensitivity	Color: 0.005 Lux @ (F1.6, AGC ON), 0 Lux with IR on
Infrared (IR)	Yes
IR range	Até 60 m
IR wavelength	850 nm

Encoding

Video streams	3
Main stream compression	H.264, H.265, H.265+
Sub stream compression	H.264, H.265, MJPEG
Third stream compression	H.264, H.265
Video bit rate	32 a 8 Mbps
Main stream resolutions	1280 x 720 (XVGA), 1920 x 1080 (1080p), 2688 x 1520
Sub stream resolutions	640 x 360 (nHD), 640 x 480 (VGA)
Third stream resolutions	1280 x 720 (XVGA), 640 x 360 (nHD), 640 x 480 (VGA)
Max. resolution @ fps	2688 x 1520 @ 25/30 fps

Lens

Lens type	Varifokal motorisiert
Focal length	2.8 a 12 mm (Horizontal FoV 95.8° a 29.2°, vertical FoV 50.6° a 16.4°, diagonal FoV 114.6° a 33.4°)
f-stop	F1.6
Auto iris	No
Auto focus	Yes
Motorized zoom	Yes

Network

Network interface	RJ-45 10/100 Mbit / s selbstanpassende Ethernet-Schnittstelle
Integration	ONVIF Profil G, ONVIF Profil S, ONVIF Profile T
Supported network protocols	802.1x, Bonjour, DDNS, DHCP, DNS, FTP, HTTP, HTTPS, ICMP, IGMP, IPv4, IPv6, NTP, PPPoE, Qos, RTCP, RTP, RTSP, SMTP, SNMP, TCP/IP, UPnP

Audio

Audio compression	G.711alaw, G.711ulaw, G.722.1, G.726, MP2L2, MP3
Audio in	1 entrada (entrada de linha), bloco de terminais de dois contactos, amplitude máxima de entrada: 3,3 Vpp, impedância de entrada: 4,7 KΩ
Audio out	1 saída (saída de linha), bloco de terminais de dois contactos, amplitude máxima de saída: 3,3 Vpp, impedância de saída: 100 Ω

Alarm I/O

Alarm inputs	1
Alarm outputs	1 (max. 12 VDC, 30 mA)
Alarm I/O connection	Bloco de terminais

Storage

Local storage type	Ranhura para cartões Micro SD/SDHC/SDXC incorporada
Max. SD card capacity	256 GB

Video intelligence

Alarm trigger	HDD error, HDD full, Inicio de sesión ilegal, Conflicto de direcciones IP, Detección de movimiento, Red desconectada, Tamper de video
ROI	Compatível com 1 região fixa para o stream principal e o sub-stream
Smart event	Erweiterte Bewegungserkennung, Gesichtserkennung, Einbruchmeldetechnikserkennung, Detección de cruce de línea, Motion detection
Intelligence options	Deteção de pessoas/veículos em movimento, cruzamento de linhas e deteção de intrusão

Electrical

Operating voltage	12 VDC,1.08 A, PoE: (802.3at, 42.5 to 57 V), 0.36 to 0.27 A
Power consumption	max. 15 W

Physical

Physical dimensions	308.5 × 97.9 × 93 mm 12.2 × 3.9 × 3.7 in.
Net weight	1390 g 3.1 lb.
Shipping weight	1961 g 4.3 lb.
Colour	Schwarz
Form Factor	Zylinder

TVGP-M01-0402-BUL-B

TruVision 4MP, H.265+, Câmara IP Bullet inteligente, 60 m IR, lente de 2,8 a 12 mm, preto

Environmental

Vandal proof	Yes
Impact rating	IK10
Environment	Draussen
Operating temperature	-30 até +60°C -22 até +140°F
Relative humidity	<95% sem condensação
IP rating	IP67

Regulatory

Compliancy	CE, FCC, REACH, RoHS, UL, WEEE

Compatible Accessories

Back Box	Included with camera

Produtos compatíveis

Categoria	Referência	Descrição
Brackets & Mounts	TVD-M-PMA-SS-B	Adaptador de montagem em poste TruVision, aço inoxidável, preto

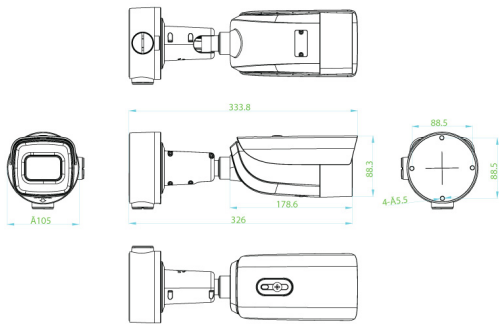

Como empresa de inovação, a Kidde Global Solutions reserva o direito de alterar as especificações do produto sem aviso prévio. Para obter informações sobre as especificações mais recentes do produto, visite pt.firesecurityproducts.com online ou contate o departamento comercial.

Last updated on 12 November 2026 - 18:57