# EST-S186

## Altifalante de Tecto

### Overview

Ceiling mounted fire alarm EST-S186 loudspeaker is designed for operations at high acoustic levels and the highest reduction in power supply. Actual wide band high efficiency ensures the best understanding of verbal messages. Its parameters have been carefully selected to comply with suspended ceiling applications, both at standard and considerably elevated ceiling-to-floor distance.

Thanks to the most advanced technologies EST-S186 loudspeaker combines excellent acoustic parameters and high aesthetics with resistance to mechanical damages. It is distinguished by easy and quick installation.

Quality standards and audio characteristics have been confirmed through multiple tests and trials employing such facilities as e.g. echo-proof chamber, resistance and integrity testing equipment.

The EST-S186 loudspeaker ensure a balanced sound which is extremely important in emission of highly understandable speech.

The EST-S186 loudspeaker is noticeable thanks to its elegant looks. The loudspeaker part which becomes visible after the installation is covered by a common and aesthetic white paint coat (RAL 9003).

EST-S186 is equipped with a standardized fire dome made of soft steel and supplied with two cable penetrations with rubber glands. Special jig for sling assembling facilitates quick installation. Ceramic blocks and fireproof wiring coupled with temperature limit fuse are located inside fire dome.

The individual power rating is selected by means of connection with applicable transformer branch.

EST-S186 loudspeaker equipped with fire dome and thermal protections entirely comply with EN 54-24 Standards. In order to ensure 100% consistency with the highest quality standards, we test our loudspeaker following the most meticulous procedures that warrant high parameters of sound emission, safety, and reliability.

In spite of the fact our loudspeaker is designed for the highest reliability under fire conditions, their acoustic parameters and attractive low prices make them successful in any and all public address systems.



### Detalhes

- Conformidade com a EN 54-24
- Certificado de Conformidade: 1438-CPR-0671
- Conformidade com a norma BS5839-8 (Protecção térmica)
- O mais alto nível de compreensão da comunicação verbal
- Design Elegante
- Transformador de 6 W que permite uma selecção precisa da potência de saída dos altifalantes
- 100% de protecção da linha contra quebras e curto-circuitos

# EST-S186
## Altifalante de Tecto

## Especificações técnicas

### Physical

| | |
|---|---|
| Dimensões físicas | 175 x 75 mm (Ø x H) |
| Peso líquido | 0.66 kg |
| Cor | Weiß (RAL 9003) |
| Tipo de montagem | Federklemme |
| Posição de montagem | Decke |
| Material da caixa | ABS |

### Environmental

| | |
|---|---|
| Classificação IP | 32C |

### Regulatory

| | |
|---|---|
| Standards | EN54-24 |

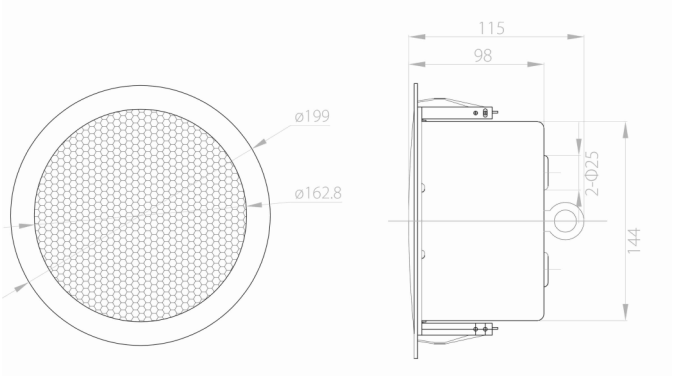


EDWARDS
Built for Resilience

Como empresa de inovação, a Kidde Global Solutions reserva o direito de alterar as especificações do produto sem aviso prévio. Para obter informações sobre as especificações mais recentes do produto, visite pt.firesecurityproducts.com online ou contate o departamento comercial.

Last updated on 12 November 2026 - 18:57