EST-S186

Ceiling-mounted Prompt Installation Loudspeakers

Overview

Ceiling mounted fire alarm EST-S186 loudspeaker is designed for operations at high acoustic levels. Actual wide band high efficiency ensures the best understanding of verbal messages. Its parameters have been carefully selected to comply with suspended ceiling applications.

Thanks to the most advanced technologies EST-S186 loudspeaker combines excellent acoustic parameters and high aesthetics. It is distinguished by easy and quick installation.

Quality standards and audio characteristics have been confirmed through tests and trials in an anechoic chamber, resistance and integrity testing equipment, as well as chambers for resistance to weather and air humidity testing.

The EST-S186 loudspeaker ensure a balanced sound which is extremely important in emission of highly understandable speech. EST-S186 is equipped with a standardized fire dome made of ABS and supplied with two cable penetrations with rubber glands.

The individual power rating is selected by means of connection with applicable transformer branch.

EST-S186 loudspeaker equipped with fire dome, ceramic block and thermal protections entirely comply with EN 54-24 Standard. In order to ensure 100% consistency with the highest quality standards we test our loudspeakers following the most meticulous procedures that warrant high parameters of sound emission, safety, and reliability.

In spite of the fact our loudspeaker is designed for the highest reliability under fire conditions, their acoustic parameters and attractive low prices make them successful in any and all public address systems.



Details

- Compliance with EN 54-24
- Certificate of Conformity: 1438-CPR-0671
- Compliance with BS5839-8 standard (Thermal protection)
- The highest level of verbal communication understanding
- Elegant looks
- 6 W transformer allowing a precise selection of loudspeaker output power
- 100% protection of line from breaks and short-circuits

EST-S186

Ceiling-mounted Prompt Installation Loudspeakers

Technical specifications

Electrical

Power consumption	6 W
Tappings 100 V line according to EN 54-24, W	6 / 3 / 1.5 / 0.75
Tappings 70 V line, W	3 / 1.5 / 0.75 / 0.375
Transformer impedance, Ω 100 V	1667 / 3333 / 6667 / 13333
Driver impedance	8 Ω
Effective frequency range	120 to 20000 Hz
Sensitivity @ 4 m, 1 W	79 dB
SPL @ 4 m, Rated power	86 dB
SPL @ 1 m, 1 W, Test signal bandwidth 300 Hz – 6 kHz	91 dB
SPL @ 1 m, Rated power, Test signal bandwidth 300 Hz – 6 kHz	99 dB
Dispersion at 500 Hz / 1 kHz / 2 kHz / 4 kHz, [°]	180 / 180 / 150 / 90

Physical

Physical dimensions	175 x 75 mm (Ø x H) Ø 150 mm (Cut-out)
Net weight	0.66 kg
Colour	White (RAL 9003)
Mounting type	Spring clamp
Mounting position	Ceiling
Housing material	ABS

Environmental

Operating temperature	-10 to +55°C
IP rating	IP32C
Environmental type / IP Rating according to EN 54-24	A / IP21C

Regulatory

Standards	EN54-24

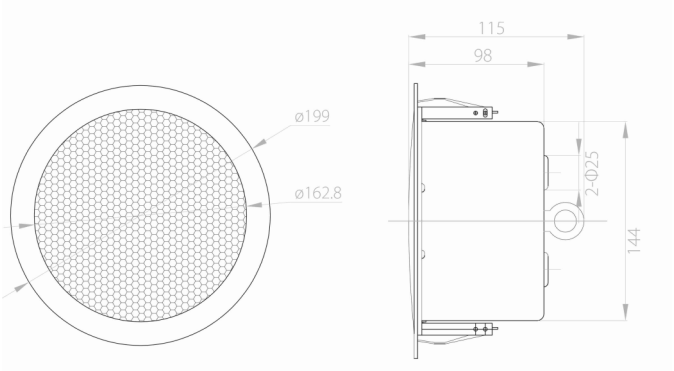

EDWARDS
Built for Resilience

As a company of innovation, Kidde Global Solutions reserves the right to change product specifications without notice. For the latest product specifications, visit firesecurityproducts.com online or contact your sales representative.

Last updated on 3 February 2026 - 12:31